SUPPLEMENT

TO THE

NEW ZEALAND GAZETTE

OF

THURSDAY, MARCH 19, 1908.

Published by Authority.

WELLINGTON, THURSDAY, MARCH 19, 1908.

CONTENTS.

International and Intercolonial Arrangements for the Mutual Protection of Patents and Trade Marks.

INTERNATIONAL CONVENTION.

THE following countries now belong to the Convention:—

Australia.	Italy.
Belgium.	Japan.
Brazil.	Mexico.
Ceylon.	New Zealand.
Cuba.	Norway.
Denmark and Faroe Islands.	Portugal, with the Azores and Madeira.
Dominican Republic.	Servia.
France, with Algeria and Colonies.	Spain.
Germany.	Sweden.
Great Britain.	Switzerland.
Holland, with East Indian Colonies, Curaçoa, and Surinam.*	Tunis.
	United States of America.

* Trade marks only.

Separate arrangements have been made between Australia and New Zealand.

Particulars of the Convention and of such arrangements may be seen in the following *Gazettes*:—

Notification of adhesion of New Zealand to the Convention, with text thereof (in English), in the *Gazette* of 26th November, 1891; notification of adherence of New Zealand to the Additional Act of the Convention, with text (in English), of such Additional Act, in Patents Supplement to *Gazette* No. 101, of the 16th November, 1905; Order in Council applying section 103 of the Imperial Act to New Zealand, in *Gazette* No. 27, of the 15th May, 1890; Orders in Council containing arrangements between Australia and New Zealand, in Patent Supplements to the *Gazette* Nos. 22 of the 9th March, 1905, and 38 of the 20th April, 1905.

Patent Publications in New Zealand.

THE following publications relating to Patents for inventions, &c., are open to inspection in the colony:—

WELLINGTON.—PATENT OFFICE LIBRARY.

United Kingdom.

The full text of the specifications and complete drawings of inventions patented from the year 1617 up to the 12th December, 1907.

Classified illustrated abridgments of inventions from 1855 to 1904 and part of 1905.

Illustrated Official Journal, containing lists of recent applications, abridgments of inventions for which patents have been lately granted, patents void, &c., to January, 1908.

Index of Applicants.

Subject-matter Index.

Commissioner of Patents Journal, &c.(a).

Trade Marks Journal to November, 1907.

Canada.

Patent Office Record (containing illustrated abridgments of inventions, &c.) to October, 1907.

Australia.

The full text of the specifications and complete drawings in respect of applications accepted from the 11th January to the 1st March, 1907, inclusive.

The Official Journal of Patents of the Australian Commonwealth (containing lists of applications for letters patent, abridgments of complete specifications accepted, &c.).

The Australian Official Journal of Trade Marks (containing lists of applications for registration of trade marks, &c.).

Specifications, drawings, abridgments, and indexes of Victoria, New South Wales, Queensland, and South Australia(b).

United States.

The full text of the specifications and drawings for the year 1905.

The Official Gazette of the United States Patent Office (containing illustrated abridgments of specifications, &c.) to January, 1908.

Mexico.

The Official Gazette of the Patent and Trade Mark Office.

General.

La Propriété Industrielle (the official organ of the International Bureau of the Union for the Protection of Industrial Property).

Patent laws of the world.

Patent and Trade Mark Review.

Text-books and handbooks on patents and trade marks.

AUCKLAND.—PUBLIC LIBRARY.

United Kingdom.

Classified abridgments of inventions from 1855 to 1904.

Illustrated Official Journal from 1897 to date.

Canada.

Patent Office Record (containing illustrated abridgments of inventions, &c.) from 1897 to date.

Australia.

The Official Journal of Patents from 1905 to date.

United States.

The Official Gazette of the United States Patent Office (containing illustrated abridgments of specifications, &c.) from 1885 to 1887 and 1890 to 1895.

CHRISTCHURCH.—PUBLIC LIBRARY.

United Kingdom.

Classified abridgments of inventions from 1855 to 1904.

Illustrated Official Journal from October, 1905, to date.

Canada.

Patent Office Record (containing illustrated abridgments of inventions, &c.) from 1897 to date.

Australia.

The Official Journal of Patents from 1905 to date.

(a) Discontinued.

(b) In arrear. Not now being printed.

DUNEDIN.—TOWN HALL.

United Kingdom.

Classified abridgments of inventions from 1855 to 1904.

Illustrated Official Journal from October, 1905, to date.

Australia.

The Official Journal of Patents from 1905 to date.

Books and Documents open to Inspection at Patent Office, Wellington.

THE following documents and books are open to public inspection at the Patent Office:—

PATENTS.

(Fee for each search or inspection, not exceeding one hour, 1s.)

1. The files relating to all applications for letters patent in respect of which complete specifications have been accepted.
2. Classified copies of specifications and drawings, with index and key(a).
3. Register of Applications for Letters Patent.
4. Register of Patents.
5. Register of Subsequent Proprietors of Letters Patent(b).
6. Index of Patentees(c).
7. Index of Proprietors of Letters Patent granted prior to 1890(d).
8. Index of Specifications(e).

DESIGNS.

(Search fee, 1s. each quarter of an hour.)

1. Register of Designs, with Index of Names of Proprietors.
2. Classified Representations of Designs in respect of which Copyright has expired.
3. Index of Designs.

TRADE MARKS.

(Search fee, 1s. each quarter of an hour.)

1. The files relating to all applications for registration of trade marks.
2. Register of Applications for Registration of Trade Marks.
3. Register of Trade Marks.
4. Index of Applicants for Registration of Trade Marks(f).
5. Index of Trade Marks.
6. Classified Representations of Trade Marks, with indexes.

MISCELLANEOUS.

Register of Patent Agents.

FORMS AND PUBLICATIONS.

The following forms, &c., may be had on application at the Patent Office, Wellington, or at any of the local Patent Offices named below:—

Application for letters patent.

Provisional specification.

Complete specification and copy thereof.

Application for registration of design.

Application for registration of trade mark.

Applications for extension of time.

Requests by subsequent proprietor to enter name on Register of Patents and Trade Marks.

Printed sheets of information as to fees and procedure to obtain letters patent and to register a trade mark(g).

Pamphlet containing Act and Regulations (price 1s.).

(a) Key is in card index.

(b) This Register contains only names of subsequent proprietors of letters patent granted prior to 1st January, 1890; since that date they appear in Register of Patents.

(c) Includes all names of applicants, &c., and consists of four volumes to 4th November, 1903, and card index since that date. A separate card index is kept for current quarter.

(d) The names of proprietors of subsequent letters patent appear in the Index of Patentees.

(e) Contains classified abridgments of specifications from 1861, with extracts from drawings from July, 1904.

(f) Names of applicants for registration and proprietors of trade marks are indexed at the beginning of the Registers up to 31st December, 1889; in separate volume up to 5th September, 1904; and since the latter date in card index.

(g) May also be obtained at any local Patent Office or money-order office.

Official Publications.

THE following publications may be obtained from the Government Printer, Wellington:—

Printed specifications to the end of the year 1879.

Annual lists of letters patent and letters of registration applied for, and particulars of applications lapsed, and patents lapsed, from 1880 to 1893 inclusive. (The lists for the last four of these years are contained in the *Annual Reports of the Registrar.*)

Annual reports of the Registrar, containing alphabetical indexes of applicants for letters patent and of subject-matter of inventions patented from 1894 to 1906 inclusive.

The Patents Supplement to *Gazette* (containing notifications, applications for letters patent, abridged descriptions and drawings of inventions, &c.), published fortnightly.

Local Patent Offices.

LOCAL Patent Offices for the reception of applications, supply of forms, &c., have been established at the following places:—

Auckland—Supreme Court. (E. W. Cave, agent).
Thames—Courthouse. (J. Jordan, agent.)
Gisborne—Courthouse. (G. J. A. Johnstone, agent.)
New Plymouth—Courthouse. (W. A. D. Banks, agent.)
Napier—Courthouse. (A. Trimble, agent.)
Wanganui—Courthouse. (C. A. Barton, agent.)
Nelson—Courthouse. (E. C. Kelling, agent.)
Blenheim—Courthouse. (J. Terry, agent.)
Westport—Courthouse. (O. E. Bowling, agent.)
Greymouth—Courthouse. (B. Harper, agent.)
Hokitika—Courthouse. (J. N. Nalder, agent.)
Christchurch—Supreme Court. (W. W. Samson, agent.)
Ashburton—Courthouse. (F. W. Hart, agent.)
Timaru—Courthouse. (T. W. Tayler, agent.)
Oamaru—Courthouse. (R. P. Ward, agent.)
Dunedin—Supreme Court. (T. E. Roberts, agent.)
Queenstown—Courthouse. (A. J. Thompson, agent.)
Invercargill—Courthouse. (J. R. Colyer, agent.)

Applications for Letters Patent filed.

LIST of applications for Letters Patent filed. (Where a complete specification accompanies an application an asterisk is affixed; in all other cases a provisional specification has been lodged. In all cases where the applicant is not the inventor the name of the latter appears in italics after the title.)

No. 24078.—4th March.—C. Angus, Tallarook, Vic.
Contact means for electrical circuit to be made by rolling-stock, &c.

No. 24079.—4th March.—G. G. Turri, Melbourne, Vic.
Repairing felted heads of piano-hammers.* (*R. R. Bode.*)

No. 24080.—4th March.—F. A. Deunert and J. J. Jackson, Kyabram, Vic.
Tire-inflation mechanism.*

No. 24081.—4th March.—W. J. Sturgess, Birmingham, Eng.
Bearings for looking-glasses, blind-rollers, &c.* (Date applied for under section 106, 8th March, 1907.)

No. 24082.—4th March.—F. W. Nicholls, London, Eng.
Testing for moisture in butter, &c.*

No. 24083.—4th March.—United Shoe Machinery Company, Paterson, U.S.A.
Press. (*C. Bennion.*)

No. 24084.—4th March.—F. Bennitt, Illinois, U.S.A.
Roasting and sintering ores.* (*A. S. Dwight and R. L. Lloyd.*)

No. 24085.—4th March.—I. A. Smith, Gore, N.Z.
Bed back-rest for invalids.

No. 24086.—4th March.—W. Wass, Sheffield, Eng., and the Trades Unionists' Sheep-shear Co-operative Society, Limited, Sheffield, Eng.
Sheep-shearing machine.*

No. 24087.—4th March.—R. A. Martin, Hastings, N.Z.
Clothes-line.*

No. 24088.—29th February.—C. G. P. De Laval, Stockholm, Sweden.
Iron extraction.*

No. 24089.—29th February.—R. Millis, Dunedin, N.Z.
Gold-saving process.

No. 24090.—29th February.—W. Lizzani, Dunedin, N.Z.
Washboard.

No. 24091.—29th February.—T. Morris, Dunedin, N.Z.
Vehicle-step protector.*

No. 24092.—2nd March.—J. L. Kirkbride, Auckland, N.Z.
Tire for motor-car.

No. 24093.—5th March.—W. H. Hennah and A. K. W. Rissel, Wellington, N.Z.
Ship deviation-from-course recorder.

No. 24094.—5th March.—D. R. Dossetor, Melbourne, Vic.
Billiard-table.* (Date applied for under section 106, 30th May, 1907.)

No. 24095.—5th March.—American Box Ball Company, Indianapolis, U.S.A.
Game.* (*D. H. Talbert.*)

No. 24096.—5th March.—R. V. Ffrench, Brisbane, Q.
Branding-apparatus.*

No. 24097.—5th March.—R. T. Haines, Windsor, Vic.
Washing-machine.*

No. 24098.—5th March.—G. Ridgway, Kalgoorlie, W.A.
Filtering-machine.*

No. 24099.—5th March.—R. N. R. Lindsay, Auckland, N.Z.
Compass.

No. 24100.—6th March.—W. Meharry, Hokitika, N.Z.
Oiling traps, spring drays, &c.

No. 24101.—6th March.—K. R. W. Moore, Blenheim, N.Z.
Hairpin.

No. 24102.—6th March.—M. and E. A. Brown, Christchurch, N.Z., and W. P. Rough, Wellington, N.Z.
Anti-rattler for sliding windows and doors.

No. 24103.—6th March.—C. A. Soans and A. H. Graves, Chicago, U.S.A.
Party-line telephone.*

No. 24104.—6th March.—J. Bennett, Oamaru, N.Z.
Appliance for use in operating screw-drivers.*

No. 24105.—7th March.—A. C. Murray, Timaru, N.Z.
Bucket-handle for kerosene-tins, &c.

No. 24106.—5th March.—R. Millis, Dunedin, N.Z.
Apparatus for catching and conveying stripped flax.

No. 24107.—6th March.—R. Dunne, Dunedin, N.Z.
Mitre-cutter.

No. 24108.—6th March.—J. Thompson, Dunedin, N.Z.
Whole-back-boot manufacture.

No. 24109.—6th March.—R. H. Knox, Nightcaps, N.Z.
Reel-blade for harvester.

No. 24110.—6th March.—A. E. Maxwell, Melbourne, Vic.
Telephone call or number recording apparatus, &c.

No. 24111.—9th March.—O. Bredehorst, Kimbolton, N.Z.
Spring cart.

No. 24112.—9th March.—W. A. Campbell, Tinwald, and J. H. Kerr, Ashburton, N.Z.
Moisture-in-wool detector.

No. 24113.—10th March.—T. Beckett, Palmerston North, N.Z.
Method of propelling vessels.

No. 24114.—10th March.—R. A. Fonseca, Timaru, N.Z.
Self-balancing window-sash.

No. 24115.—9th March.—A. T. G. Symons, Christchurch, N.Z.
Clincher wire-dropper.

No. 24116.—11th March.—J. H. Hutchinson, Auckland, N.Z.
Transporting merchandise and other material.

No. 24117.—11th March.—E. Murray, Glasgow, Scot.
Cycle-motor and other vehicle wheel.*

No. 24118.—11th March.—E. E. Clover, Halstead, Eng.
Hand washer and cleaning apparatus.* (Date applied for under section 106, 27th March, 1907.)

No. 24119.—11th March.—E. F. W. Alexanderson, Schenectady, U.S.A.
Alternating-current motor.*

No. 24120.—11th March.—J. M. Landon, Norwood, Eng.
Talking-machine.

No. 24121.—11th March.—R. J. Fry, Carlton, Vic.
Making and preparing blanks in horse-shoe.*

No. 24122.—12th March.—N. Guthridge, Sydney, N.S.W.
Machinery of ore-concentrators. (*W. L. and F. S. Card.*)

No. 24123.—9th March.—W. T. Auckram, Otahuhu, N.Z.
Two-reel bobbinless sewing-machine.

No. 24124.—12th March.—L. Hardaker, Petersham, N.S.W.
Pneumatic-tired wheels for road-vehicle.* (Date applied for under section 106 of the Act, 5th April, 1907.)

No. 24125.—12th March.—H. Burrows, Sydney, N.S.W.
Desiccated-egg manufacture.

No. 24126.—12th March.—D. Marzi, Rome, Italy.
Telephone apparatus.*

No. 24127.—12th March.—W. Silver, Tamworth, N.S.W.
Sheep-shearing machine.*

No. 24128.—12th March.—D. Mulcahy, Fremantle, W.A.
Railway-ticket-issuing cabinet. (*W. Watts.*)

No. 24129.—12th March.—A. F. Crosse, Frankfort, Trans.
Extraction of gold and silver from slimes.
No. 24130.—12th March.—F. R. Kron, Darlinghurst, N.S.W.
Tanning and production of leather.
No. 24131.—12th March.—S. H. Knight, Hastings, N.Z.; D. E. Davis, Hastings, N.Z.; and C. D. Lightband, Wellington, N.Z.
Cover for pneumatic tires.
No. 24132.—13th March.—J. J. Duncan, Christchurch, N.Z.
Cover for pneumatic tires for motor-cars, &c.
No. 24133.—13th March.—F. W. Fagon, Christchurch, N.Z.
Construction of playing-cards.
No. 24134.—13th March.—G. J. Brown, Christchurch, N.Z.
Feed receptacle or bag for animals.
No. 24135.—13th March.—T. L. Mullaily, Buenos Ayres.
Covering for hay and other stacks, &c.*
No. 24136.—10th March.—J. R. Park, Dunedin, N.Z.
Incandescent mantles for radiating heat.*
(*Welsbach Light Company of Australasia, Limited—M. P. V. Delage.*)
No. 24137.—10th March.—J. Mackey, Dunedin, N.Z.
Tongs for handling cooking-utensils.
No. 24138.—10th March.—E. A. Hytten, Copenhagen, Denmark.
Telegraphonic apparatus.*
No. 24139.—12th March.—W. Pinches, Wanganui, N.Z.
Sand or pumice soap-powder.
No. 24140.—14th March.—E. Henshall and E. S. Ramsay, Christchurch, N.Z.
Cow-bail.

Complete Specifications filed after Provisionals.

LIST of complete specifications filed after provisional specifications, from the 5th to the 16th March, 1908, inclusive:—

No. 22938.—G. Johnson and F. J. McLaren, safety-guard for razor.
No. 22954.—E. J. Keogh, cleansing carpets, floors, &c. (F. J. Corbett.)
No. 22982.—W. Biddle, tire-protector.
No. 22983.—F. Hutton, knife-cleaner.
No. 23060.—United Shoe Machinery Company, abrading-device. (W. A. Reed.)
No. 23084.—J. Kershaw, machine for pressing hops in packets.
No. 23647.—J. W. Butterworth, electric fire-alarm.
No. 23884.—B. W. Benn, milking-apparatus.

Notice of Acceptance of Complete Specifications.

Patent Office,
Wellington, 18th March, 1908.

COMPLETE specifications relating to the undermentioned applications for Letters Patent have been accepted, and are open to public inspection at this office. Any person may, at any time within two months from the date of this *Gazette*, give me notice in writing of opposition to the grant of any such patent. Such notice must set forth the particular grounds of objection, and be in duplicate. A fee of 10s. is payable thereon.

No. 22566.—20th March, 1907.—WILLIAM ERNEST HUGHES, of Queen's Chambers, Wellington, New Zealand, Registered Patent Agent (nominee of Printing Machinery Company, Limited, of 188 Fleet Street, London, England, the assignees of Henry Alexander Wise Wood, of No. 1 Madison Avenue, New York, United States of America, Engineer). Improvements in machines for finishing and cooling unfinished articles, especially unfinished curved stereotypes.

Extract from Specification.—The said improvements relate to: (*a*) A runway consisting of anti-friction devices, and inclined at such an angle that the articles can slide down it by gravity so long as none of the said devices cease to be anti-frictional, and having combined with it brake mechanism to cause certain of the said devices to cease being anti-frictional; (*b*) rotary cutters rotating constantly in the plane of the runway, and meeting the articles as they slide down the same; (*c*) automatic means by which each article as it slides down the runway into a position within the finishing-device closes the driving-clutch, whereupon the article is automatically stopped, clamped, finished, and unclamped, and certain of the anti-friction devices cease being anti-frictional; (*d*) automatic means by which, as an article slides down the runway out of the finishing-device, the said anti-friction devices become anti-frictional again, and the driving-clutch is opened; (*e*) automatic means by which each article as it slides down the runway towards and into the cooling-arch is stopped, and has cooling streams delivered on to it so long as it remains within the said arch, and by which the following stereotype as it slides down the runway towards the cooling-device disengages the stop, thereby allowing the cooled stereotype to slide out of the cooling-arch.

[NOTE.—The above extract from the specification is inserted in place of the claims.]

(Specification, 14s.; drawing, 7s.)

No. 22591.—21st March, 1907.—ROBERT BENJAMIN WILLIAMS, of Winton, New Zealand, Commission Agent. Improvements in umbrellas.*

Claims.—(1.) In umbrellas, mounting the rib frame upon the stick in such a manner that it will be free to revolve thereon, substantially as and for the purposes specified. (2.) In umbrellas, a rib frame mounted upon the stick in such a manner as to be free to revolve thereon, and means for holding the frame in a closed condition, consisting of a collar upon the sliding ferrule of the frame, and a catch-piece secured upon the stick and adapted to engage with the collar on the ferrule when the frame is closed, substantially as specified. (3.) In umbrellas, means for holding the frame in the closed condition, substantially as described and explained, and as illustrated in Figs. 1 and 2 of the drawings. (4.) In umbrellas, means for holding the frame in the closed condition, substantially as described and explained, and as illustrated in Fig. 3 of the drawings. (5.) The general arrangement, construction, and combination of parts in my improvements in umbrellas, substantially as described and explained, as illustrated in the drawings, and for the several purposes set forth.

(Specification, 4s.; drawing, 1s.)

No. 22605.—25th March, 1907.—GEORGE EDWIN WOODBURY, of 238 Townsend Street, San Francisco, California, United States of America, Manufacturer of Mining Machinery. Improvements in ore-concentrating machines.*

Extract from Specification.—The improvements comprising the present invention relate chiefly to a novel form or construction of the concentrating-surface, to a reciprocating mechanism of novel construction, to a novel construction of pulp-distributing box, to a water-distributing trough containing several novel features, and to an improved means for adjusting and varying the pitch or inclination of the table.

[NOTE.—The above extract from the specification is inserted in place of the claims.]

(Specification, £1 7s. 6d.; drawing, 5s.)

No. 22620.—28th March, 1907.—JOHN PEARSON HORNER, of Epsom, Auckland, New Zealand, Saddler. An improved shaft-tug.*

Extract from Specification.—The improved tug is formed of metal of any desired thickness and width, shaped to receive the shaft. Upon its outer face are found three loops or keepers that are adapted to allow of the backband being passed therethrough. The loops are arranged at a suitable distance apart, and a steel pin is secured into the metal midway between the two lower loops, and projects outwards therefrom. The pin is so shaped as to pass through holes found in the backband, and to be retained therein. The backband is threaded down through the two top loops on to the pin so it will fit along the face of the tug, and then through the bottom loop, while the tug will be dependent upon it (the pin) in the usual manner.

[NOTE.—The above extract from the specification is inserted in place of the claims.]

(Specification, 1s. 6d.; drawing, 1s.)

No. 22791.—7th May, 1907.—EDGAR LAWRY SHORT, of Ettiwanda Avenue, Mildura, Victoria, Australia, Fruit-grower, and ALFRED PICKFORD, of Karadoc Avenue, Mildura aforesaid, Fruit-grower. A bacterial filter applicable to closets and urinals.*

Extract from Specification.—The filter consists of a quantity of absorbent material which is favourable to bacterial growth, such as the sawdust of Australian red-gum timber, contained

in a porous framework or receptacle. Its chief characteristics are absorptiveness and porosity, consequently air will penetrate to its interior as easily as water does, and the air-borne bacteria which assists in breaking up organic matter into inorganic substances will be enabled to perform their functions in the filter.

[NOTE.—The above extract from the specification is inserted in place of the claims.]

(Specification, 8s. 6d.; drawing, 2s.)

No. 22792.—9th May, 1907.—JAMES MAWSON STEWART, of 141 Hereford Street, Christchurch, New Zealand, Public Accountant. Summary cash-book.*

Claim.—The combination in an account-book of a statement-sheet, with a series of sheets devoted to the purposes indicated, and arranged in the order specified, each sheet having a heading, and divided into columns, and bearing forms prepared for filling in records of accounts and the like, substantially as set forth.

(Specification, 1s. 9d.; drawings, 6s.)

No. 22833.—16th May, 1907.—GEORGE HUTCHINSON, of Warwick House, Christchurch, Canterbury, New Zealand, Inventor.—Improved valve-cap holder for pneumatic valves.*

Claims.—(1.) A holder for closure caps of pneumatic valves and the like, made from one piece of wire, and comprising a spiral spring adapted to fit upon the valve-body, a spring bow portion adapted to pass around one of the spokes of a wheel upon which the valve is employed, and a loop adapted to encircle a neck upon the valve-cap, substantially as specified. (2.) A holder for closure caps of pneumatic valves and the like, made from one piece of wire, and comprising a spring bow portion, a portion bent to fit upon the article upon which it is to be employed, and means for securing the cap to the end of said holder, substantially as specified. (3.) In a holder of the class described, the combination with an integrally formed bow spring, of a spiral spring also integrally formed, substantially as specified.

(Specification, 3s. 3d.; drawing, 1s.)

No. 22840.—14th May, 1907.—GEORGE SIDNEY WILLIDEN, of Dunedin, New Zealand. Slater. Improved water- and damp-proof concrete blocks.*

Claims.—(1.) In concrete building-blocks, the insertion of a sheet of non-absorbent material between the inner and outer faces of same to prevent the creeping of damp through said blocks, all substantially as shown in the drawing, and as described and explained. (2.) In reinforced building-blocks, the combination with same of a non-absorbent material placed so as to keep the damp from penetrating through the block, the reinforcement passing through the said non-absorbent material, substantially as set forth. (3.) In reinforced building-blocks of concrete, the combination with same of a non-absorbent material placed to keep the damp from penetrating the block, the reinforcement passing round the edge of the material, all substantially as set forth. (4.) In building-blocks, the combination of a horizontal and vertical damp-proof material, forming the usual damp-course, with the method of preventing the damp passing through the block, all substantially as set forth. (5.) In solid building-blocks, in combination with them, a vertical non-absorbent sheet with reinforcement to strengthen same, all substantially as described and as explained.

(Specification, 2s.; drawing, 1s.)

No. 22920.—30th May, 1907.—UNITED SHOE MACHINERY COMPANY, of Paterson, State of New Jersey, United States of America, a corporation duly organized under the laws of said State of New Jersey, carrying on business as Shoe-machinery Manufacturers, and having a place of business at 205 Lincoln Street, Boston, Massachusetts, United States of America (the assignees of Emery Bayard, of Rochester, Monroe, New York, United States of America, Foreman). Improvements in or relating to method of and apparatus for use in making shoes.*

Claims.—(1.) In a machine employed for conforming uppers to lasts, and comprising the combination of a last, pivotally or otherwise supported, a device to engage the forward portion of an upper thereon, and means to effect relative movement of the said last and device, so arranging and operating these parts that as the distance between the said device and the maximum convexity of the heel is increased the tension exerted thereby through the forepart of the upper shall stretch towards the toe, for the purpose described, the whole of that portion of the heel end of the upper situated between the level of the edge of the last and the level of that maximum convexity. (2.) In a machine comprising the combination and carrying out the operation set forth in preceding claiming-clause No. 1, so arranging and operating the parts that the operation is effected without materially bending the upper over the toe part of the last, whereby the marginal parts of the upper will not be materially relieved from the lengthwise stress primarily set up in them. (3.) In mechanism employed to carry out the operation set forth in preceding claiming-clause No. 1 or Nos. 1 and 2, the provision of means to lock, while the shoe parts at the heel end of the shoe are adjusted and secured, the device or apparatus which exerted the tension aforesaid, whereby they are enabled to maintain that tension during the adjusting and securing. (4.) In the manufacture of shoes, a process which consists in (1) first employing the combination of a last, a device to engage the forward portion of an upper thereon, and means to effect relative movement of said last and device in such a manner that as the distance between the said device and the maximum convexity of the heel is increased the tension exerted thereby through the forepart of the upper shall stretch towards the toe, for the purpose described, the whole of that portion of the heel-end of the upper that is situated between the level of the edge of the last and the level of that maximum convexity; and subsequently employing, while the aforesaid tension is maintained, (2) the following steps, singly or in combination: (*a*) fastening the upper, with or without the stiffener or other contiguous parts, to the rear face of the last; (*b*) fastening the upper, with or without the stiffener or other contiguous parts, to the insole or to the last at the rear of the tread-face of the last; (*c*) by attaching the heel portion of the upper, with or without the stiffener or other contiguous parts, to the insole or to the last at the sides of the tread-face of the last. (5.) In an apparatus of the class described, the combination with means for sustaining a last in inverted position, of grippers arranged below the last and movable lengthwise of the last, and means to actuate the grippers for stressing the upper lengthwise of the last. (6.) In a machine employed for conforming uppers to lasts, and having its parts so arranged and operated as to carry out the operation referred to in preceding claiming-clause No. 1 or No. 2, the provision of a scale to indicate the extent to which the upper upon the last has been pulled lengthwise with relation to the last. (7.) In a machine employed for conforming uppers to lasts, and having its parts so arranged and operated as to carry out the operation referred to in preceding claiming-clause No. 1 or No. 2, the provision of a scale on each side of the last in the region of the tip seam, whereby the operator can determine the correct position to which to pull the said seam, with or without means for angularly adjusting the last. (8.) For carrying out the operation set forth in preceding claiming-clause No. 1 or No. 2, the apparatus substantially as described, and illustrated in the drawings.

(Specification, 18s.; drawing, 3s.)

No. 23514.—24th September, 1907.—AGOSTINO RAVELLI, of Arenzano, near Genoa, Italy, Inventor. Improved apparatus for utilising the movement of sea-waves.

Extract from Specification.—The apparatus comprises the following parts: 1. Members adapted to collect the effort of the sea-waves, working-surface, or the like. 2. Members adapted to actuate compressors, and to collect and distribute the compressed air. 3. Members adapted to transform the vertical movement into alternate rotary movement. 4. Members adapted to return the working-surface to its position of rest. 5. Members for rendering the working-surface elastic. 6. Supporting members for allowing the apparatus to be displaced in a longitudinal as well as in a vertical direction, so as to favour the flow and the rising of the waves upon the working-surface.

[NOTE.—The above extract from the specification is inserted in place of the claims.]

(Specification, 12s.; drawing, 7s.)

No. 23746.—21st November, 1907.—CHARLES NORTH, of Te Awamutu, Auckland, New Zealand, Brickmaker. Willow and noxious-weeds exterminator.

Claims.—(1.) The described composition of matter, consisting of arsenate of soda, malachite green aniline dye, or magenta (roseine) aniline dye, and water, substantially as described, and for the purpose specified. (2.) The described composition of matter for killing weeds, trees, and the like, consisting of arsenate of soda five pounds, malachite green aniline dye ten to fifteen grains, or magenta (roseine) aniline dye ten to fifteen grains, and water one gallon, substantially as described.

(Specification, 1s. 3d.)

No. 23824.—8th May, 1907.—JOSEPH BAKER AND SONS, LIMITED, of Hythe Road, Willesden Junction, London N.W., England, Engineers (the assignees of John Burns, of 300 Tuam Street West, Christchurch, New Zealand, Engineer). Improvements in machines for dividing dough and other plastic materials.

[NOTE.—This is an application under section 106 of the Act, the date given being the official date of the application in Great Britain.]

Claims.—(1.) In a machine for dividing dough and other plastic materials, the combination of a plurality of rotary dividing or separating members having peripheral feathers or teeth adapted to intersect or mesh, and plates or knives located adjacent the ends of said rotary members for removing and retaining surplus material separated by the feathers or teeth of the rotary members, substantially as set forth. (2.) The combination with the features set forth in claim 1 of means for braking or offering resistance to rotation of a rotary member or members, for the purpose set forth. (3.) A machine for dividing dough and other plastic materials comprising, in combination, a pair of coacting rollers having peripheral teeth adapted to intersect, means for positively driving one of said rollers, means for braking the other roller, means for relatively adjusting the position of the rollers, a hopper adapted to feed material to a point at or adjacent the intersection of said rollers, and means for removing and retaining surplus material divided by the rotary and intersecting action of the rollers aforesaid, substantially as and for the purpose set forth.

(Specification, 3s. 6d.; drawing, 2s.)

No. 23883.—3rd January, 1908.—RICHARD KLINGER, of Gumpoldskirchen, Lower Austria, Engineer. Improvements in stuffing-box and like packing.

Claim.—Stuffing-box and the like packing comprising packing-material covered at those parts which are in contact with the moving part of the machinery it is arranged to pack, with a layer of metal in which holes or slotlike openings are formed, the remaining portions of the packing material being left free from such metal covering, for the purpose of obtaining permanent lubrication and reducing the wear of the packing-material.

(Specification, 2s.; drawing, 1s.)

No. 23885.—3rd January, 1908.—ERNEST SMITH BALDWIN and HENRIE HAMPTON RAYWARD, carrying on business as Patent Agents at 71 Lambton Quay, Wellington, New Zealand (the nominees of Seth Louis Johnson, of Holmbank Lodge, Tyersal, Bradford, York, England, and William Edward Calvert, of 117 Beechwood Road, Illingworth, Halifax, York, England). Improvements in connection with cutters for sheep-shearing.

Claims.—(1.) In apparatus for removing wool, hair, or the like from the skins of animals, a rotary cutting-disc having a number of minute or finely divided serrations upon its periphery and co-operating with a shield or guard, substantially as described. (2.) In apparatus for removing wool, hair, or the like from the skins of animals, as claimed in claim 1, a shield or guard-plate having a space between it and the rotary disc, and provided with fingers or the like projecting beyond the periphery of the disc, and having upwardly curved under-faces, substantially as described. (3.) Apparatus for removing wool, hair, or the like from the skins of animals, comprising a rotary cutting-disc having a number of minute or finely divided serrations upon its periphery, a casing in which is rotatably mounted a sleeve carrying the cutting-disc, a guard-plate hinged to the casing and adapted to be held in operative position by a bolt or the like passing through the rotating sleeve to the top of the casing, and means for rotating the sleeve, substantially as described. (4.) In apparatus such as claimed in claim 1, for removing wool, hair, or the like from the skins of animals, means for protecting and preventing fracture of the flexible shaft, comprising a grooved handle mounted on the cutter-casing, a non-rotatable flexible covering between the handle and the power-shaft, and projections or the like on the end of the covering adapted to engage the groove, substantially as described. (5.) An improved apparatus for removing wool, hair, or the like from the skins of animals, substantially as described, with reference to the drawings.

(Specification, 6s. 9d.; drawing, 1s.)

No. 23967.—3rd February, 1908.—CHARLES HERBERT WESTNEAT, of Napier, New Zealand, Monumental Mason. Improved means for use in indicating a rise in temperature.

Claims.—(1.) In means for indicating a rise in temperature, comprising a thermometer placed within an electrical alarm-circuit and having the lower end of its tube connected with one terminal of the circuit, and a platinum wire passing downwards through the top of the tube and connected with the other terminal of the circuit, a vertical socket-piece arranged above the upper end of the thermometer-tube, and a set-screw threaded through such socket and to the lower end of which the platinum wire is secured, substantially as specified. (2.) In means for indicating a rise in temperature, and comprising a thermometer placed within an open electrical alarm-circuit adapted to be closed by the rising of the mercury in the thermometer-tube, a metal bowl arranged beneath the thermometer-bulb and in electrical connection with one terminal of the circuit, and a connection with the other terminal of the circuit placed within the bowl but free from contact therewith, substantially as and for the purposes specified. (3.) The improved means for use in indicating a rise in temperature, substantially as described and explained, and as illustrated in the drawings.

(Specification, 3s. 6d.; drawing, 1s.)

No. 23978.—3rd February, 1908.—ROBERT WOOLLEY GIBBS, of Waimea Road, Nelson, New Zealand, Carpenter, and BARBUT RENTOUL, of Waimea Road aforesaid, Seaman. An improved device for brushing and cleaning the records and needle of cylinder talking-machines.

Claim.—For the make and design of the spring A of any material suitable for the same, and for the way, shape, and manner of fixing it into the socket of brush, and the way, shape, and manner of applying it to cylinder talking-machines, for and in the manner described.

(Specification, 1s. 6d.; drawing, 1s.)

No. 23981.—7th February, 1908.—WILLIAM HOOKER, of 14 Mowbray Street, Albert Park, South Melbourne, Victoria, Australia, Gas-engineer. An automatic apparatus for supplying air for various purposes.

Claim.—In an automatic apparatus of the character described, the combination of a crank driving-wheel H, the electric motor A1 connecting with the crank-wheel H by a belt G and in electric circuit with the battery A and the switch, a pitman L, and bellows M1, the pipes O and R communicating with the bellows M1, the water-seal chamber P, or air-valve Z3 and air-holder S, a switch-rod X1 connecting with said holder S, and the electric switch handle B and elastic band X, and a primary electric-cell battery A, whereby an electric current passing between the battery A and the motor A1 will be automatically switched off when the air-holder S has ascended to its highest limit of travel and has been pumped full of air, or switched on when at its lowest position and requiring to be refilled.

(Specification, 3s. 6d.; drawing, 1s.)

No. 23984.—7th February, 1908.—JOHN ANDERSON, Brass-founder and Engineer, and JAMES DEWAR HUNTER, Accountant, both of Moray Place, Dunedin, New Zealand. An improved curd-rack.

Claims.—(1.) In cheesemaking, in draining the curds, a rack made entirely of metal, of the form shown, and for the

purpose as set forth. (2.) In combination, in draining curds, a metal rack formed of light rounded metal laths, with clips for connecting them to the lower cross strips and braces, all substantially as shown on the drawing, and as described and as explained.

(Specification, 1s. 3d.; drawing, 1s.)

No. 23990.—10th February, 1908.—THOMAS JOSEPH GILFEDDER, of Athol, Southland, New Zealand, Teacher. An improved speed-indicator.

Claims.—(1.) In means for indicating the speed of vehicles, a pair of governor balls mounted upon a fixed spindle and geared with the vehicle-axle, a collar upon such spindle and capable of sliding movement thereon, attached to the governors, and indicating-mechanism actuated by the sliding movements of the collar, substantially as specified. (2.) In means for indicating the speed of vehicles, a pair of governor balls mounted upon a fixed spindle and geared with the vehicle-axle, a sleeve upon the spindle connected with the governor balls, a sliding collar upon the spindle attached to the sleeve but held from rotation therewith, and indicating-mechanism actuated by the sliding movements of the collar, substantially as specified. (3.) The improved speed-indicator constructed and operated substantially as described and explained, and as illustrated in the drawings.

(Specification, 3s. 6d.; drawing, 1s.)

No. 23993.—12th February, 1908.—JOHN PERRY MAYNE, of 14 King Street, Melbourne, Victoria, Australia, Manufacturer. An improved milk or cream cooler.

Extract from Specification.—My invention relates to the cooling of liquids, but particularly milk or cream, by apparatus of that class in which the liquid is allowed to pass in a film down the exterior of an internally cooled corrugated cone. One object of my invention is to provide an improved cooler of this nature in which the cooling-chamber has a semi-circular or other like shape sectioned channelway round its bottom, and a neck at its top, said neck being capable of accommodating different detachable heads, such as a milk, or a cream, or other liquid containing head. Another object is to provide detachable heads for said cooler. This invention, in general, seeks to provide a cooler which is sanitary, inasmuch as it can be easily cleaned, having no crevices or corners which are inacessible to the eye or brush; which permits a regulated distribution of milk or cream upon the cone, and also cuts up and assures the distribution of any clotted cream that may be poured into the head or reservoir; and which has likewise a regulator for regulating the escape of the said cream to the corrugated cone.

[NOTE.—The above extract from the specification is inserted in place of the claims.]

(Specification, 6s.; drawing, 1s.)

No. 23995.—12th February, 1908.—WILLIAM ERNEST HUGHES, of Queen's Chambers, Wellington, New Zealand, Registered Patent Agent (nominee of Frederick Clutsam, of "Lauderdale," St. Kilda Road, St. Kilda, Victoria, Australia, Musician). Improvements in pianofortes, organs, and like musical instruments.

Extract from Specification.—In a keyboard according to this invention the heads of the white digitals near the central portion of the keyboard are of more than the normal length, to allow sufficient area of accommodation for the fingers, more especially when playing with crossed hands. This increased accommodation is required principally in the middle two octaves, or thereabouts. In addition to this increased length of the white heads, a keyboard according to this invention is preferably so formed that the front edges of its black and white digitals form curved contours, thus bringing the ends of the keyboard more within the range of the hands. Curved keyboards have been proposed previously, but they have not afforded the increased accommodation on the white digitals near the centre of the keyboard. Moreover, a curved keyboard according to this invention is preferably made so that the curved contours formed by the edges of the black and white digitals correspond to curves calculated in the manner described, so as to bring the digitals into a very advantageous position beneath the performer's hands.

[NOTE.—The above extract from the specification is inserted in place of the claims.]

(Specification, 12s. 6d.; drawing, 3s.)

No. 23997.—1st August, 1907.—CHARLES ADAMSON SMITH, of North Shore, Geelong, Victoria, Australia, Engineer; JAMES CAMPBELL BROWN, of Corio Street, Geelong aforesaid, Engineer; ALEXANDER ROSS SMITH, of North Shore, Geelong aforesaid, Salesman; and ALBAN HENRY WILLS, of 90 Power Street, Hawthorn, Victoria aforesaid, Manager. An improved docking and castrating apparatus.

[NOTE.—This is an application under section 106 of the Act, the date given being the official date of the application in the Commonwealth of Australia.]

Claims.—(1.) An improved docking and castrating apparatus, comprising a searing-iron mounted on a pivoted handle and adapted to be heated in its raised position, and provided with a lever by means of which it is swung down and sears off the tail, substantially as set forth. (2.) In a docking and castrating apparatus, a pair of pivoted searing-irons operating in opposite directions upon tables on either side of the lamp and held by spring catches back to back in a vertical position against the flame thereof, an adjustable lever for operating each of said searing-irons, a block on the base plate for each iron, and a spring-controlled removable adjustable shield at the side of each block, provided with a recess on its under-side to hold the tail in position, substantially as set forth. (3.) In a docking and castrating apparatus, a vertically adjustable ledge removably attached to the base plate parallel to the block, for the purpose of supporting a ram during the operation of castration, substantially as set forth. (4.) In a docking and castrating apparatus as described, the use therewith of a tweezer-shaped tool, such as illustrated in Fig. 3, for assisting in the castration operation.

(Specification, 3s. 9d.; drawing, 1s.)

No. 23999.—11th February, 1908.—THE AUSTRAL CANNING COMPANY PROPRIETARY, LIMITED, carrying on business as Canners at 10 and 12 Market Street, Melbourne, Victoria, Australia (the assignees of James Webster, of 10 and 12 Market Street, Melbourne aforesaid, Merchant). Improvement in tin canisters having lids removably secured by tearing strips.

Claim.—In a tin canister of the character described, a lid having a downwardly projecting flange adapted to fit in a circular recess around the upper end of the can-body, said lid being soldered to the outer wall of the recess around the top, and said outer wall scored along the bottom and formed with a tab, all substantially as and for the purposes set forth.

(Specification, 1s. 9d.; drawing, 1s.)

No. 24003.—15th February, 1908.—GEORGE RUTHVEN, of Mosgiel, Otago New Zealand, Horse-trainer. Improved hock-boot for horses.

Claims.—(1.) A device for the purpose indicated, consisting of the parts constructed, combined, and operating substantially as specified, and illustrated in the drawing. (2.) A hock-boot in three portions, the upper portion being dished or recessed to receive the hock-joint and having a pad upon its lower end, a middle portion pivotally connected to the upper part, and a lower portion secured by sewing or the like to the lower end of the middle portion, with straps upon each part for securing the device to the leg of the horse, substantially as specified, and illustrated in the drawing.

(Specification, 1s. 6d.; drawing, 1s.)

No. 24014.—19th February, 1908.—JAMES THOMAS HUNTER, of Queen's Chambers, Wellington, New Zealand, Patent Agent (the nominee of Linotype and Machinery, Limited, of 188 and 189 Fleet Street, London, England, the assignees of John Glennie Holbourns, of 188 and 189 Fleet Street, London, England, Linotype-operator, and Henry Alexander Longhurst, of 1 Bethune Road, Stoke Newington, Middlesex, England, Engineer). Improvements in typographical composing and distributing machines.

Claims.—(1.) In a typographical composing and distributing machine having matrices stored in a magazine, the combination with the matrix-assembling mechanism, of a device capable of being adjusted by the operator so as to turn the matrices 180° about their vertical axes during their passage from the magazine to the assembly-box. (2.) In a typographical composing and distributing machine having matrices stored in a magazine, the combination with the matrix-

distributing mechanism, of a device capable of turning each matrix individually through 180° about its vertical axis during its passage from the casting-position to the magazine (3.) In a typographical composing and distributing machine having matrices stored in a magazine, the combination of means for turning the matrices through an angle of 180° as they are being assembled, and means for turning them through a like angle as they are being distributed. (4.) In a typographical composing and distributing machine, the combination with a vertically reciprocating lifter adapted, at each ascent, to lift the foremost of a line of separable matrices, of a horizontally slidable spring-pressed rod above the said line of matrices, adapted to be moved horizontally by the lifted matrices, and to detach from the lifted foremost matrix any of the other or following matrices which may be raised by the lifter along with the said foremost matrix. (5.) In a typographical composing and distributing machine according to claim 2, the combination with the distributor-screws and the lift-box wherein the matrices are lifted into engagement with the said screws, of a second lift-box situated at a higher level than the other one, and between which and such other lift-box the matrix-turning device is situated. (6.) In apparatus according to claim 5, the combination with a set of matrices, each having a recess or notch in its foot, of a lifter having a projection adapted to enter the said notch when the lifter is moved for raising some of the matrices, and to engage the feet of other of the matrices, a pusher adapted to engage those of the matrices whose feet are engaged by the lifter projection, and two shoots—one rifled for receiving the last-mentioned matrices, and the other plain or non-rifled for receiving those matrices into whose notches the lifter projector enters.

(Specification, 17s. 6d.; drawing, 3s.)

No. 24015.—19th February, 1908.—JAMES THOMAS HUNTER, of Queen's Chambers, Wellington, New Zealand, Patent Agent (the nominee of Linotype and Machinery, Limited, of 188 and 189 Fleet Street, London, England, the assignees of John Glennie Holbourns, of 188 and 189 Fleet Street aforesaid, Linotype-operator, and Henry Alexander Longhurst, of 1 Bethune Road, Stoke Newington, Middlesex, England, Engineer). Improved method of and means for justifying tabular matter in linotype machines.

Extract from Specification. — The present invention consists in an improved method of and means for justifying tabular matter in linotype machines. It exactly meets the requisition stated, and is also exceedingly simple. In carrying it into effect, there must be two abutments in the assembler or part of the machine where the matrices and space-bars that make up the line are assembled. This assembler consists essentially of a pair of horizontal and parallel bars, and the line is assembled between them. It is known as the "assembler box," the "assembler elevator," "place of assemblage," and so forth, according as to whether it is movable or fixed. Both abutments are adjustable as to position in the assembler. One of them is capable of being positioned in front of the measure, and the other one after it, speaking in terms of the direction of assemblage. The well-known yielding resistant which is pushed along the assembler by the first matrix in the line as the matter lengthens may be used as one of these abutments. Both are held in or to the assembler at a distance apart equal to the length of the measure to be justified, or to that length plus that of the measure or measures already justified. The unjustified measure is justified manually by inserting quads, and the abutment, or both of them, withdrawn from the assembler. This is repeated for each measure in the line. When the last measure has been dealt with, and the last abutment withdrawn, the operator has a line of measures each justified within its own length and position, and, therefore, a justified line.

[NOTE.—The above extract from the specification is inserted in place of the claims.]

(Specification, 12s.; drawing, 5s.)

No. 24035.—22nd February, 1908.—WILLIAM JAMES PALLANT, of Palmerston North, New Zealand, Bootmaker. Improvement in the manufacture of the upper part of shoes and other footwear.

Claim.—An improvement in the manufacture of the upper part of shoes and other footwear, which improvement consists in cutting the said upper in the manner described, whereby at one cutting the said upper itself is cut out and the strips or fastenings by which the said shoe or other footwear is fastened to the foot in the manner indicated are provided from the same piece of leather as that from which the said upper is cut.

(Specification, 1s. 6d.; drawing, 2s.)

An asterisk (*) denotes the complete specification of an invention for which a provisional specification has been already lodged.

NOTE.—The cost of copying the specification and drawing has been inserted after the notice of each application. An order for a copy or copies should be accompanied by a post-office order or postal note for the cost of copying.

The date of acceptance of each application is given after the number.

Extracts from the drawings accompanying the foregoing complete specifications appear at the end of this *Gazette*.

J. C. LEWIS,
Registrar.

Provisional Specifications accepted.

Patent Office,
Wellington, 18th March, 1908.

APPLICATIONS for Letters Patent, with provisional specifications, have been accepted as under:—

No. 23607.—S. J. Plain, sluice-box. (R. Griffin.)
No. 23987.—K. Young, fire-alarm and check.
No. 23994.—W. C. Watson, H. Bolton, and D. Mulcahy, railway-carriage lever brake.
No. 24006.—A. J. Hoban, lifting-brake.
No. 24008.—D. M. Wallace, swingletree-end.
No. 24009.—G. Hutchinson, triple seed-sower.
No. 24011.—W. M. Orr, ladder roller for dredge.
No. 24018.—A. R. E. Burton, bread-manufacture. (W. H. J. Willson.)
No. 24019.—W. H. Duncan, water-heater.
No. 24023.—J. E. Friend, turbine.
No. 24025.—D. W. Dike, knee-rest for milking-bucket.
No. 24026.—C. F. Gardner, oil-tank filler.
No. 24027.—A. J. Madden, liquid pressure by pneumatic apparatus.
No. 24034.—J. Blake, teat-cup.
No. 24036.—A. J. Edwards, trolly-head of electric car.
No. 24037.—A. Lawton, milk cooler or heater.
No. 24039.—J. G. Hudson and J. W. Mardon, signalling-apparatus.
No. 24042.—J. R. Noble and F. C. Brown, tube-mill feed.
No. 24043.—G. Hyde, extension dining-table.
No. 24045.—A. E. Brown, water-outflow governor.
No. 24052.—C. G. McKellar, pelton wheel.
No. 24057.—A. Parker, totalisator.
No. 24059.—A. C. Anderson, agricultural implement.
No. 24061.—A. G. Barnett, tie-adjuster for double collar.
No. 24062.—J. Gaut, photographic camera.
No. 24063.—C. Davies, vacuum tank for milking-machine.
No. 24068.—R. A. Wiggins, teat-cup.
No. 24071.—A. K. W. Rissel and W. H. Hennah, temperature-recorder.

[NOTE.—Provisional specifications cannot be inspected, or their contents made known by this office in any way, until the complete specifications in connection therewith have been accepted.]

Letters Patent sealed.

LIST of Letters Patent sealed from the 5th March to the 13th March, 1908, inclusive:—

No. 21707.—A. Parker, vending postage-stamps.
No. 21971.—A. Cattlin, rolling-pin.
No. 22058.—United Shoe Machinery Company, guides for inseam sewing-machine. (C. I. Fuller.)
No. 22059.—United Shoe Machinery Company, sewing-machine. (E. E. Winkley.)
No. 22060.—United Shoe Machinery Company, machine for inserting and producing fasteners. (F. H. Perry.)
No. 22066.—United Shoe Machinery Company, machine for inserting and producing fasteners. (L. A. Casgrain.)
No. 22067.—United Shoe Machinery Company, clicking-press. (A. Bates.)

No. 22071.—S. G. Roseman and J. Lock, bunching-materials used in brush-making.
No. 22077.—T. Read, rubber heel-protector.
No. 22104.—L. O. Hooker, perch-carrier.
No. 22114.—W. G. Richardson, flax-waste as cattle-food.
No. 22120.—Cork Asphalt Limited, making blocks from plastic material. (C. M. C. Hughes, T. H. Quinlan, and R. Middleton.)
No. 22122.—C. Loomes, testing wool from centre of bale.
No. 22124.—T. Fleming and W. Lucena, clothes-line.
No. 22139.—W. F. J. Curnow, hose-coupling.
No. 22155.—United Shoe Machinery Company, assembling parts of boots or shoes. (O. Ashton.)
No. 22156.—United Shoe Machinery Company, attaching heels to boots or shoes. (J. Gouldbourn.)
No. 22166.—G. E. Humphries, scaffolding.
No. 22181.—A. Parker, ticket-issuing machine.
No. 22222.—United Shoe Machinery Company, machine for inserting fasteners. (A. Bates and H. P. Gamble.)
No. 22223.—H. S. Marks, door or gate holder.
No. 22242.—R. O. Clark, surface-glazed earthenware blocks.
No. 22243.—R. O. Clark, yard-sink.
No. 22245.—R. O. Clark, grate-fastening for drain.
No. 22411.—R. L. H. Murray, acetylene-gas-lamp generator.
No. 22480.—La Societe Anonyme Westinghouse and M. Le Blanc, jet or surface condenser.
No. 22482.—P. B. Jagger, manufacturing concrete slabs, pipes, &c.
No. 23155.—E. Ludvigsen, cash-register.
No. 23339.—International Marine Signal Company, Limited, fog-signal apparatus. (T. L. Willson.)
No. 23371.—R. L. H. Murray, acetylene-gas holder and burner.
No. 23483.—K. R. Macdonald, combination cash receipt-book.
No. 23518.—F. G. Cottrell, manufacture of sulphuric acid.
No. 23527.—G. L. Burton, acetylene-generator.
No. 23533.—W. H. J. Ridley, furnace for extracting antimony.
No. 23572.—Lamson Pneumatic Tube Company, Limited, pneumatic despatch system. (H. Burt.)
No. 23573.—L. L. J. Parant and A. P. Pichon, decolouring tobacco leaves.
No. 23599.—F. Bennitt, roasting and sintering ores. (A. S. Dwight and R. L. Lloyd.)
No. 23603.—A. A. Friestedt, metal-sheet piling.
No. 23639.—J. Searle, indicating moisture in fleece of sheep, &c.
No. 23668.—C. Gerber and E. Michaut, acetylene-generator. (P. G. Aylmer—H. R. R. Lewis.)
No. 23677.—R. M. Smith, junction chamber for drain-pipes, &c.

Letters Patent on which Fees have been paid.

[NOTE.—The dates are those of the payments.]

SECOND-TERM FEES.

No. 17633.—C. F. A., E. G., and P. P. Schaefer, stucco-ornament manufacture. (A. Lauermann.) 9th March, 1908.
No. 17687.—The Hon. C. A. Parsons, turbine. 4th March, 1908.
No. 17717.—J. F. Linke and M. S. Noack, disc plough. 4th March, 1908.
No. 17769.—The New Century Engine Company, Limited, locomotive and other engines and generators. (The New Century Engine (Foreign Patents) Company, Limited—E. Field.) 4th March, 1908.
No. 17875.—The British Westinghouse Electric and Manufacturing Company, Limited, electrical measuring-instrument. (J. P. Campbell—F. Conrad.) 4th March, 1908.
No. 17947.—The British Westinghouse Electric and Manufacturing Company, Limited, mixing-valve for explosive engine. (J. P. Campbell—L. A. Merkt.) 4th March, 1908.
No. 18015.—The British Westinghouse Electric and Manufacturing Company, Limited, current-collecting device for electric generator. (J. T. Hunter—K. F. Elers.) 11th March, 1908.

THIRD-TERM FEES.

No. 13471.—A. W. Maconochie, tin for preserved fruit. 5th March, 1908.
No. 13741.—G. Westinghouse, car-coupling. 11th March, 1908.

Subsequent Proprietors of Letters Patent registered.

[NOTE.—The name of the patentee is given in brackets; the date is that of registration.]

No. 18579.—Mauri Brothers and Thomson, Limited, a company duly incorporated in the State of New South Wales under the Companies Acts, 1899 to 1900, and having its registered office at No. 46 York Street, Sydney, in the State of New South Wales, Commonwealth of Australia. Bottling-machine. [The Crown Corporation, Limited—S. G. Plucknett and J. F. H. Howarth.] 6th March, 1908.
No. 22316.—Johnson's Patent Rolling Mill Company, Limited, of 7 Sanctuary House, Tothill Street, in the City of Westminster, England. Machinery for corrugating metal sheets. [G. B. Johnson.] 6th March, 1908.

Notice of Request to amend Specification.

Patent Office,
Wellington, 18th March, 1908.

A REQUEST for leave to amend the specification relating to the undermentioned application has been received, and is open to public inspection at this office. Any person may, at any time from one month from the date of this *Gazette*, give me notice in writing of opposition to the amendments. Such notice must set forth the particular grounds of objection and be in duplicate. A fee of 10s. is payable thereon.

No. 21867.—B. Crawford and H. A. Tattersall, hot-water system. (Advertised in Supplement to *New Zealand Gazette*, No. 99, of the 29th November, 1906.)

The nature of the proposed amendment is as follows:—

(1.) To omit the words "looping," line 20, page 2, and to insert the words "being carried or fitted" after the word "pipe," line 20, page 2.

(2.) To insert the words "with or without a loop" after the word "pipes," line 23, page 2.

(3.) To omit the words "comprised in the loop," line 25, page 2, and to insert instead the words "thus fitted."

(4.) To omit the words "and formed into loop 13," line 14, page 3.

(5.) To insert the words "and may be given a loop formation" after the word "range," line 15, page 3, and the word "it" before the words "the pipe," line 15, page 3.

(6.) To omit the words "and if necessary forming," and insert instead the words "with or without," lines 3 and 4 of claim 1.

The proprietor (B. Crawford) states, "The reason for amendment is so as to more clearly indicate the character of the invention."

J. C. LEWIS,
Registrar.

Application for Letters Patent opposed.

NOTICE of opposition has been entered in the following case:—

No. 22747.—Hale: Opposed by the Humphries Scaffold Bracket Company.

Applications for Letters Patent abandoned.

LIST of applications, with which provisional specifications only have been filed, abandoned (*i.e.*, complete specifications not lodged) from the 5th to the 18th March, 1908, inclusive:—

No. 22780.—F. A. Vaughan, F. McLeod, and P. McArdle, electric-car brake.
No. 22782.—E. A. Dahl, rendering fabrics waterproof.
No. 22788.—E. J. Keogh, air-exhauster. (F. J. Corbett.)
No. 22789.—H. Wriedt, measuring substances automatically.
No. 22790.—S. Martin, fire-lighter.
No. 22795.—D. A. Stewart, cup and saucer.
No. 22796.—E. Girdler, flax-stripper drive.
No. 22797.—C. Bristow, milking-machine.
No. 22804.—C. Bristow, seed-sower.
No. 22805.—G. Henderson, boot.
No. 22806.—S. Docherty, swingletree.
No. 22807.—O. T. Madeley, horse-controller.
No. 22808.—O. T. Madeley, mail-bag fastener.
No. 22813.—J. Holland, rabbit-trap.
No. 22816.—J. A. Wilson and D. Sullivan, emergency brake.

No. 22817.—C. J. Johnson and G. Toogood, trolly-pole.
No. 22818.—A. Dunn, windmill-rod swivel joint.
No. 22820.—R. A. Martin, clothes-drying apparatus.
No. 22821.—W. J. Kulitze, automatic pump.
No. 22827.—F. G. Browne and C. F. Lungley, treatment of hides, &c.
No. 22829.—A. and F. McLeod, procuring kauri-gum from swamps.
No. 22832.—J. I. Watson, motor-car-tire pump.
No. 22835.—M. Moore and T. J. Heskett, iron-ore reduction.
No. 22838.—W. Edgar, wire-strainer.
No. 22839.—J. W. Wood and C. J. Ward, operating tramway-points.
No. 22841.—H. J. Haywood, floor-polisher.
No. 22843.—H. Weatherall, water-lifting.
No. 22844.—F. W. B. Greville, milk-preserving.
No. 22845.—A. C. Idiens, removing lead-headed nails from corrugated iron.
No. 22846.—F. Roberts, oil-feeder.
No. 22848.—G. Robinson, horse-shoe.
No. 22849.—C. H. Hulme, billy-can.
No. 22851.—H. G. Bedell, ventilating-skylight.
No. 22852.—T. C. McLennan, lock-fastening.
No. 22853.—W. Beamish, animal-trap.
No. 22866.—B. W. Benn, teat-cup.

Application for Letters Patent void.

APPLICATION for Letters Patent, with which complete specification has been lodged, void owing to non-acceptance of such complete specification, from the 5th to the 18th March, 1908, inclusive:—

No. 22210.—T. Smith, dinner-plate.

Applications for Letters Patent lapsed.

APPLICATIONS for Letters Patent lapsed, owing to Letters Patent not being sealed, from the 5th to the 18th March, 1908, inclusive:—

No. 21748.—W. Levinson, water-cooled chamber.
No. 21759.—T. Keats, fencing-wire reel.
No. 21771.—J. H. Krause, hedge-slasher.
No. 21777.—T. Keats, plough.
No. 21789.—J. T. Jebb, egg-carrier.
No. 21790.—J. L. Rastrick, tube-scraper.
No. 21792.—P. Klein, manufacturing aluminates.
No. 21810.—I. G. Macfarlane, spraying-apparatus.

Letters Patent void.

LIST of Letters Patent void through non-payment of renewal fees, and through expiry of term of fourteen years, from the 5th to the 18th March, 1908, inclusive:—

THROUGH NON-PAYMENT OF SECOND-TERM FEES.

No. 16733.—J. Miller, wrapper.
No. 17327.—H. Allen, venetian blind.
No. 17328.—J. Bald, flushing-cistern.
No. 17339.—J. P. Andrews and J. Anderson, truing-up flax-stripping drum.
No. 17341.—A. F. Billing, frying-pan cover. (S. Whitburn.)
No. 17342.—L. S. Van Westrum, road-making method.
No. 17348.—National Cash Register Company, manifolding account-book. (G. W. Basley—B. A. Baxter.)
No. 17349.—National Cash Register Company, manifolding account-book. (G. W. Basley — B. A. Baxter and U. G. Daugherty.)
No. 17350.—W. T. S., W. H., and G. B. Humble, floor-cramp. (G. W. M. McDonald.)
No. 17352.—W. J. Armbruster and J. Morton, chlorination barrel.
No. 17357.—M. D. Synnot, trapping rabbits. (M. Murphy.)
No. 17363.—J. Ritscher, cycle throw-crank.
No. 17379.—W. J. Sellars, manufacturing skewers.
No. 17383.—A. S. Coronel, window-sash holder. (R. B. Wells.)
No. 17386.—C. E. Gray and J. S. Tolman, coin-freed machine.
No. 17390.—A. H. McCulloch, preventing volatile escape in coal.
No. 17399.—A. Lombard, motor control-governor.
No. 17442.—W. P. Daly, adjusting-bolster.

THROUGH NON-PAYMENT OF THIRD-TERM FEES.

No. 13257.—The British Westinghouse Electric and Manufacturing Company, Limited, internal-combustion-engine gasifier. (W. E. Hughes—W. A. Bole and E. Ruud.)

THROUGH EXPIRY OF TERM.

Nil.

Designs registered.

DESIGNS have been registered in the following names on the dates mentioned:—

No. 376.—The Carrara Ceiling Company, Limited, of Wellington South, in the Dominion of New Zealand, Patentees and Manufacturers of "Stuccolin" Work and Importers of Laths and Plaster. Class 3. 4th March, 1908.

Nos. 377 and 378.—The Carrara Ceiling Company, Limited, of Wellington South, in the Dominion of New Zealand, Patentees and Manufacturers of "Stuccolin" Work and Importers of Laths and Plaster. Class 3. 10th March, 1908.

Applications for Registration of Trade Marks.

Patent Office,
Wellington, 18th March, 1908.

APPLICATIONS for registration of the following Trade Marks have been received. Notice of opposition to the registration of any of these applications may be lodged at this office within two months of the date of this *Gazette*. Such notice must be in duplicate, and accompanied by a fee of £1.

No. of application: 7117.

Date: 15th January, 1908.

TRADE MARK.

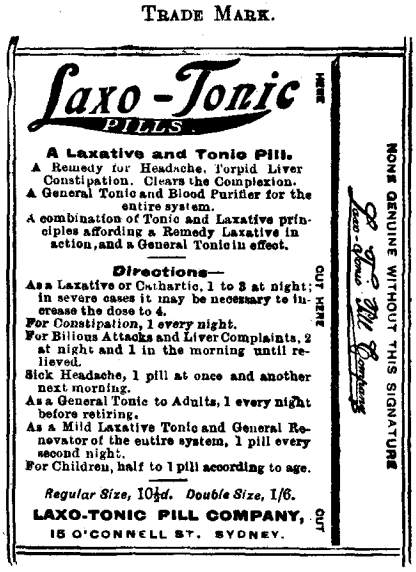

The essential particular of this trade mark is the distinctive label.

NAME.

THE LAXO-TONIC PILL COMPANY, of 15 O'Connell Street, Sydney, New South Wales, in the Commonwealth of Australia.

No. of class: 3.

Description of goods: Pills.

No. of application: 7146.

Date: 23rd January, 1908.

TRADE MARK.

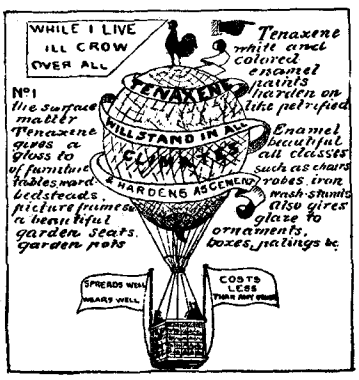

The essential particulars of this trade mark are a combination of devices, comprising a balloon in mid-air and a cock at the top and the word "Tenaxene"; and any right to the exclusive use of the added matter is disclaimed.

NAME.

JOHN MATTHEWS, of "Skegby," 183 Elswick Street, Leichhardt, Sydney, New South Wales, in the Commonwealth of Australia, Manufacturing Chemist.

No. of class: 1.

Description of goods: All materials mentioned in Class 1.

[NOTE.—Class 1 is for "Chemical substances used in manufactures, photography, or philosophical research, and anti-corrosives, such as acids, including vegetable acids, alkalies, artists' colours, pigments, mineral dyes."]

No. of application: 7147.

Date: 23rd January, 1908.

TRADE MARK.

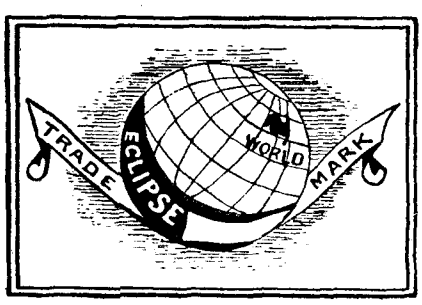

The essential particulars of this trade mark are a device of a globe representing the world, the lower part being partially eclipsed, and above the device the word "Eclipse"; and any right to the exclusive use of the added matter is disclaimed.

NAME.

JOHN MATTHEWS, of 183 Elswick Street, Leichhardt, Sydney, New South Wales, in the Commonwealth of Australia, Manufacturing Chemist.

No. of class: 42.

Description of goods: All substances used as food or as ingredients in food, and all materials mentioned in Class 42 with the exception of salt, dairy-produce, frozen meat, preserved meat, and bacon.

No. of application: 7173.

Date: 6th February, 1908.

TRADE MARK

The word

"SOURINE."

NAME.

JOHN MATTHEWS, of 183 Elswick Street, Leichhardt, New South Wales, in the Commonwealth of Australia, Chemist.

No. of class: 42.

Description of goods: All substances used as food or ingredients in food under Class 42.

No. of application: 7177.

Date: 12th February, 1908.

TRADE MARK.

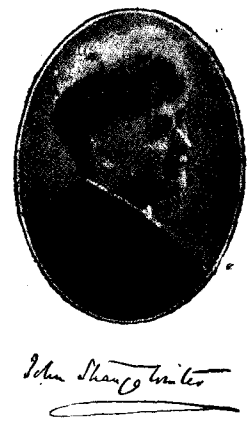

NAME.

HUTCHINSON AND CO., LIMITED, trading as "The John Strange Winter Company," of 82 Pitt Street, Sydney, New South Wales, in the Commonwealth of Australia, Public Accountants.

No. of class: 48.

Description of goods: Toilet preparations for the hair and skin.

No. of application: 7187.

Date: 18th February, 1908.

TRADE MARK.

The essential particular of the trade mark is the device; and the applicants disclaim any right to the exclusive use of the added matter, except in so far as it consists of their name.

NAME.

TOWER TEA, LIMITED, of 71 Eastcheap, London, E.C., England, Tea and Coffee Merchants.

No. of class: 42.

Description of goods: Tea, coffee, chicory, and cocoa.

(By consent.)

No. of application: 7188.

Date: 18th February, 1908.

TRADE MARK.

(The mark as shown in preceding notice No. 7146.)

The essential particulars of this trade mark are a combination of devices, comprising a balloon in mid-air and a cock at the top and the word "Tenaxene"; and any right to the exclusive use of the added matter is disclaimed.

NAME.

JOHN MATTHEWS, of "Skegby," 183 Elswick Street, Leichhardt, Sydney, New South Wales, Commonwealth of Australia, Manufacturing Chemist.

No. of class: 4.

Description of goods: All resins, oils, dyes, &c., used in Class 4.

No. of application: 7199.

Date: 26th February, 1908.

TRADE MARK.

The essential particulars of the above trade mark are the following—the device and the word "Orb"; and any right to the exclusive use of the added matter is disclaimed.

NAME.

VYSE, SONS, AND CO., LIMITED, of 76 Wood Street, London, England, Hat-manufacturers.

No. of class: 38.

Description of goods: Hats, caps, and bonnets.

No. of application: 7204.

Date: 29th February, 1908.

TRADE MARK.

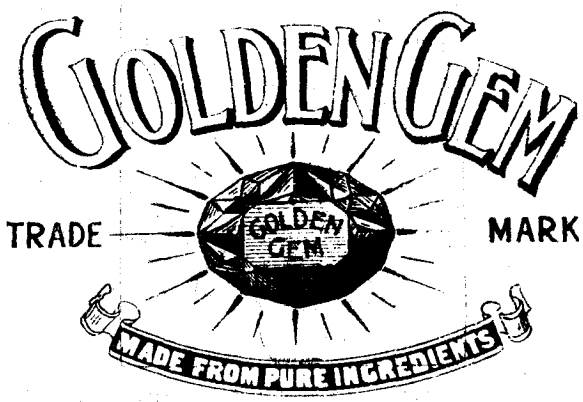

The essential particulars of this trade mark are the distinctive label, the device, and the words "Golden Gem"; and any right to the exclusive use of the words "Trade Mark," "Made from Pure Ingredients," is disclaimed.

NAME.

BURGESS, FRASER, AND CO., of New Plymouth, in the Dominion of New Zealand.

No. of class: 42.

Description of goods: Baking-powder, egg-powder, tea, olive-oil, hops, dried fruits, salt, preserved meats, pickles, and vinegar.

No. of application: 7210.

Date: 10th March, 1908.

TRADE MARK.

The words

"POET'S DREAM."

NAME.

THE SURBURG COMPANY, a corporation duly incorporated under the laws of the State of New Jersey, United States of America, and having an office at No. 132 Reade Street, in the City, County, and State of New York, United States of America, Manufacturers.

No. of class: 45.

Description of goods: All kinds of tobacco, cigars, and cigarettes.

No. of application: 7211.

Date: 11th March, 1908.

TRADE MARK.

The word

Toasties

NAME.

POSTUM CEREAL COMPANY, LIMITED, a copartnership organized under the laws of the State of Michigan, and having its place of business at Battle Creek, in the County of Calhoun and State of Michigan, United States of America.

No. of class: 42.

Description of goods: Food-products.

No. of application: 7212.

Date: 12th March, 1908.

TRADE MARK.

The essential particular of this trade mark is the device and the word "Lux"; and any right to the exclusive use of the added matter is disclaimed.

NAME.

LUX LIMITED, of 31 Queen Street, Melbourne, Victoria, Commonwealth of Australia.

No. of class: 13.

Description of goods: Lamps.

J. C. LEWIS,
Registrar.

Trade Marks registered.

LIST of Trade Marks registered from the 6th to the 18th March, 1908, inclusive:—

No. 5549/7058.—H. and W. Grear. Class 3. (*Gazette* No. 105, of the 12th December, 1907.)

No. 5550/7053.—Koko-Maricopas Company, Limited. Class 48. (*Gazette* No. 105, of the 12th December, 1907.)

No. 5815/5551.—Warnock Bros. Class 47. (*Gazette* No. 36, of the 18th April, 1907.)

Trade Mark Renewal Fees paid.

FEES paid for the renewal of the undermentioned Trade Marks for fourteen years from the date first mentioned:—

No. 1073/814.—10th March, 1908.—J. Trenwith, of Auckland, New Zealand. 10th March, 1908.

No. 1112/886.—25th April, 1908.—A. Manoy, of Motueka, New Zealand. 3rd March, 1908.

No. 1114/857.—2nd May, 1908.—Fleming, Gilkison, and Co., of Gore, New Zealand. 9th March, 1908.

Trade Marks removed from the Register.

TRADE Marks removed from the Register owing to the non-payment of the renewal fee, from the 5th to the 17th March, 1908, inclusive:—

No. 986/754.—7th December, 1893.—Temuka Dairy Company, of Temuka, New Zealand. Class 42.

No. 993/764.—13th December, 1893.—S. T. Cox, of Opunake, New Zealand. Class 42.

No. 994/746.—13th December, 1893.—C. R. Ljunggvist, of Ngamoko, New Zealand. Class 42.

No. 995/745.—14th December, 1893.—V. Vuez, of St. Claude, France. Class 50.

No. 996/821 and 997/787.—14th December 1893.—Wheatley and Bates, Limited, of Sheffield, England. Class 43.

Application for Trade Mark withdrawn.

THE following application for trade mark has been withdrawn:—

No. 7136.—H. Engelbert (advertised in Supplement to *New Zealand Gazette*, No. 10, of the 6th February, 1908.)

Subsequent Proprietors of Trade Marks registered.

[NOTE.—The name of the former proprietor is given in brackets. The date is that of registration.]

NO. 6785/5338.—Standard Oil-cloth Company, incorporated under the laws of the State of New Jersey, United States of America, located in Jersey City, in the said State of New Jersey, and having an office at No. 320 Broadway, in the City of New York, State of New York, United States of America. [Standard Table Oil-cloth Company.] 6th March, 1908.

Request for Amendment of Trade Mark Application.

NO. 6856.—Royd Brothers and Kirk, Limited (advertised in Supplement to *New Zealand Gazette*, No. 75, of the 22nd August, 1907). Cancel the statement of goods and substitute the following: "Substances used as food or as ingredients in food, excepting cheese, lime-juice cordial, tea, coffee, chicory, and cocoa."

Advertisements.

ADVERTISEMENTS are charged at the rate of 6d. per line for the first insertion, and 3d. per line for the second and any subsequent insertion.

All advertisements should be written *on one side* of the paper, and signatures, &c., should be written in a legible hand.

The number of insertions required must be written across the face of the advertisement.

Communications should be addressed to the Government Printer, Wellington, to whom post-office money-orders should be made payable. Cheques should be crossed "Public a/c," and exchange added.

Postage or duty stamps cannot be received in payment from any place at which postal notes or post-office orders are issued.

Prepayment may be demanded in any case. In order to prevent delay in publication a sufficient remittance should accompany every advertisement. Any surplus will be returned with receipted account.

By Authority: JOHN MACKAY, Government Printer, Wellington.

ILLUSTRATIONS OF INVENTIONS.

[These illustrations refer to the complete specifications accepted, and advertised in this *Gazette*.]

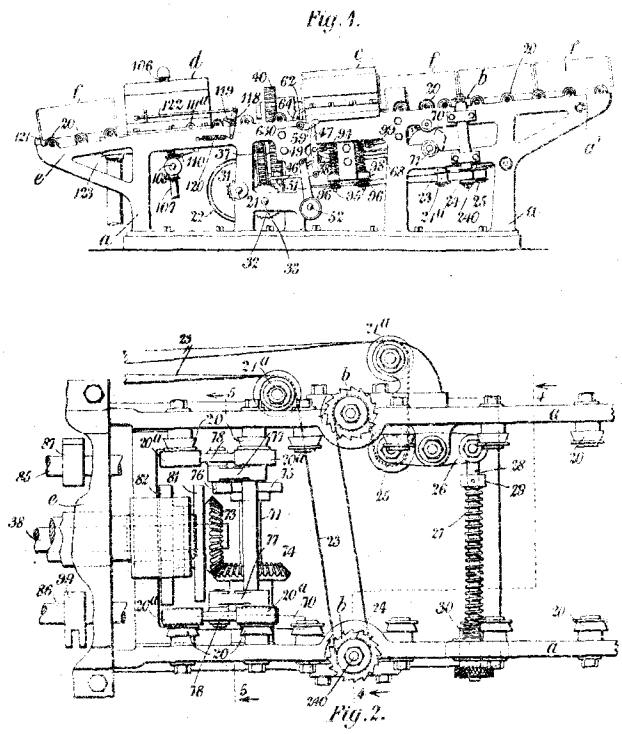

22586
Hughes. Stereotype Finisher and Cooler. (Printing Machinery Co., Ltd.,—Wood.)

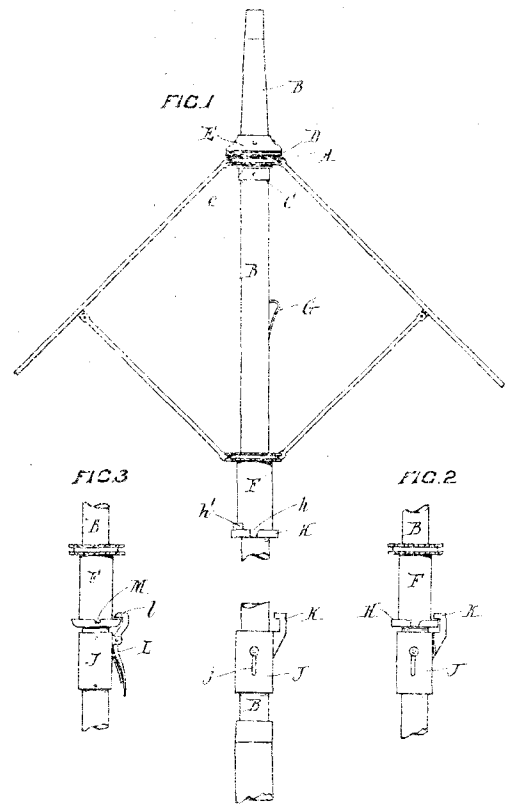

22591
Williams. Umbrella.

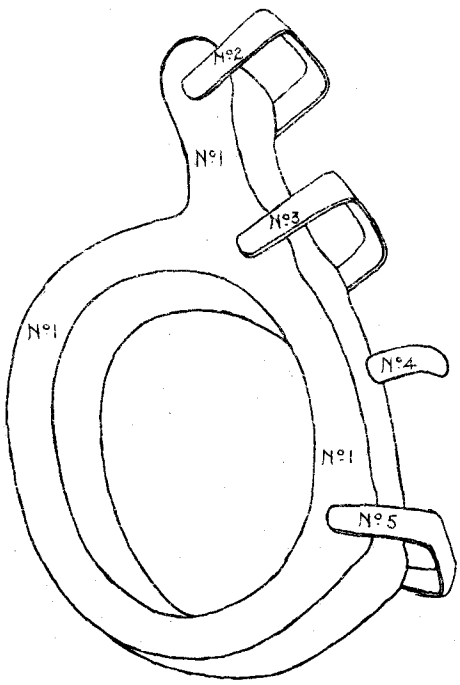

22620
Horner. Shaft-tug.

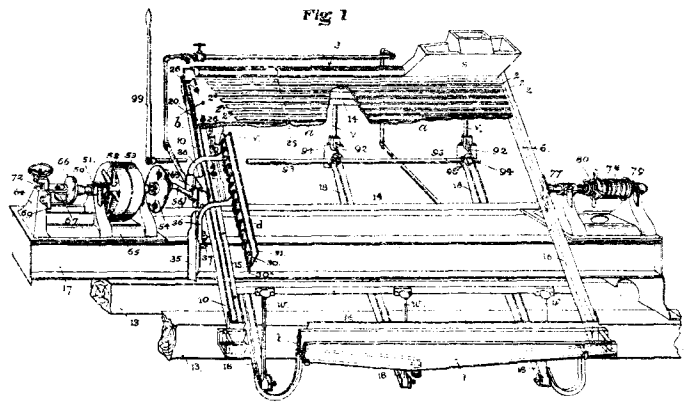

22605
Woodbury. Ore-concentrator.

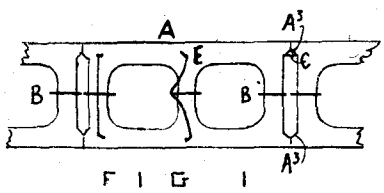

22840
Willden. Concrete Block.

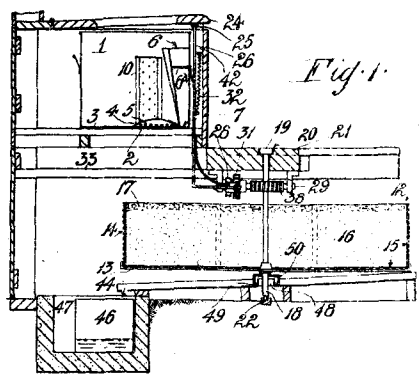

22791
Short and Pickford. Bacterial Filter.

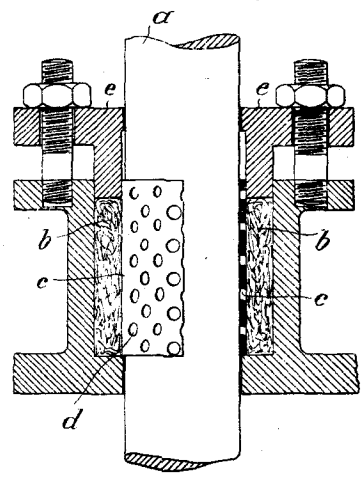

23883
Klinger. Stuffing-box.

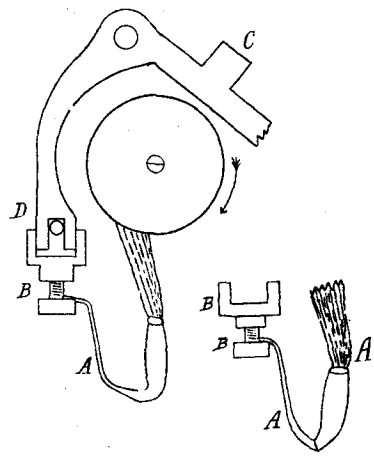

23978
Gibbs and Rentoul. Record-cleaner.

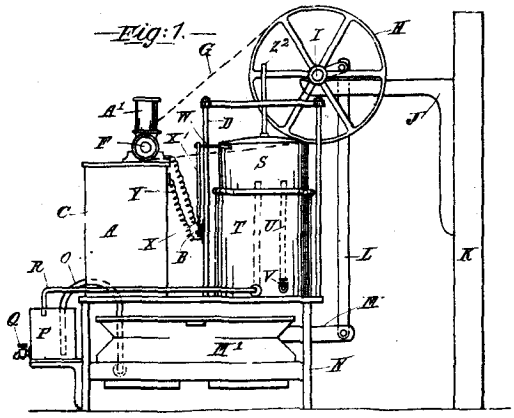

23981
Hooker. Air-supplying Apparatus.

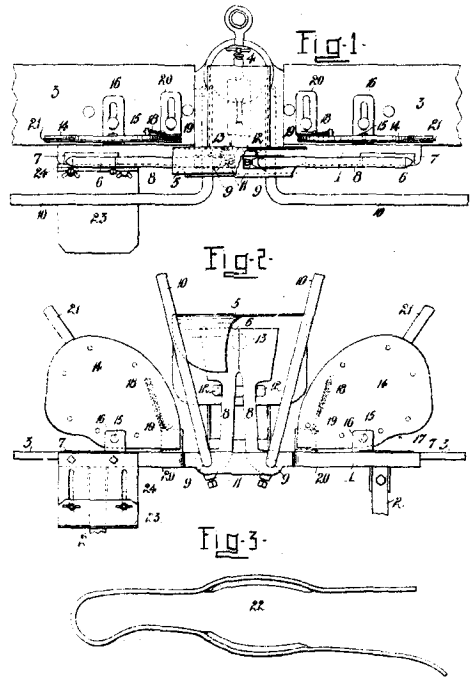

23997
C. A. Smith, J. C. Brown, A. R. Smith, and A. H. Wills. Docking &c., Apparatus.

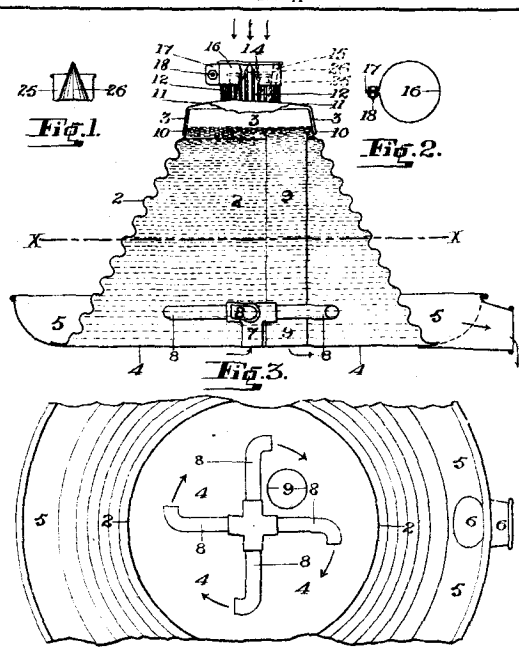

23993
Mayne. Milk-cooler.

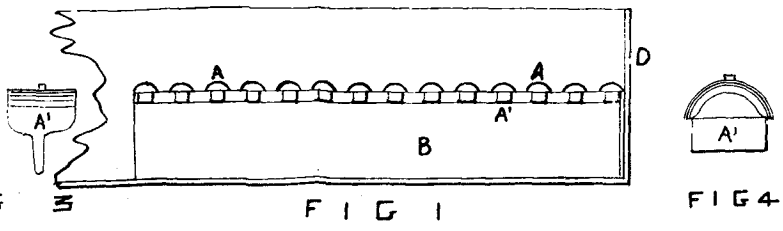

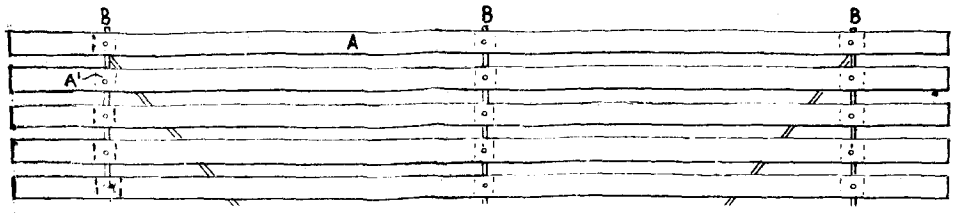

23984
Anderson and Hunter. Curd-rack.

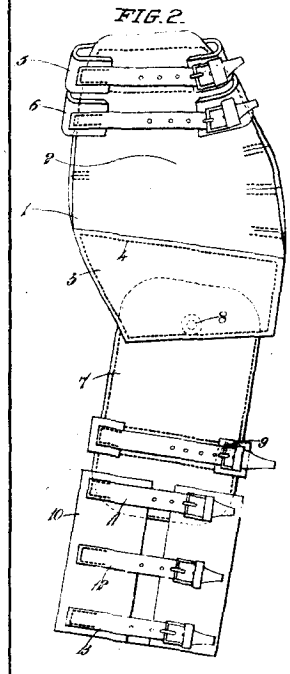

24003
Ruthven. Hock-boot.

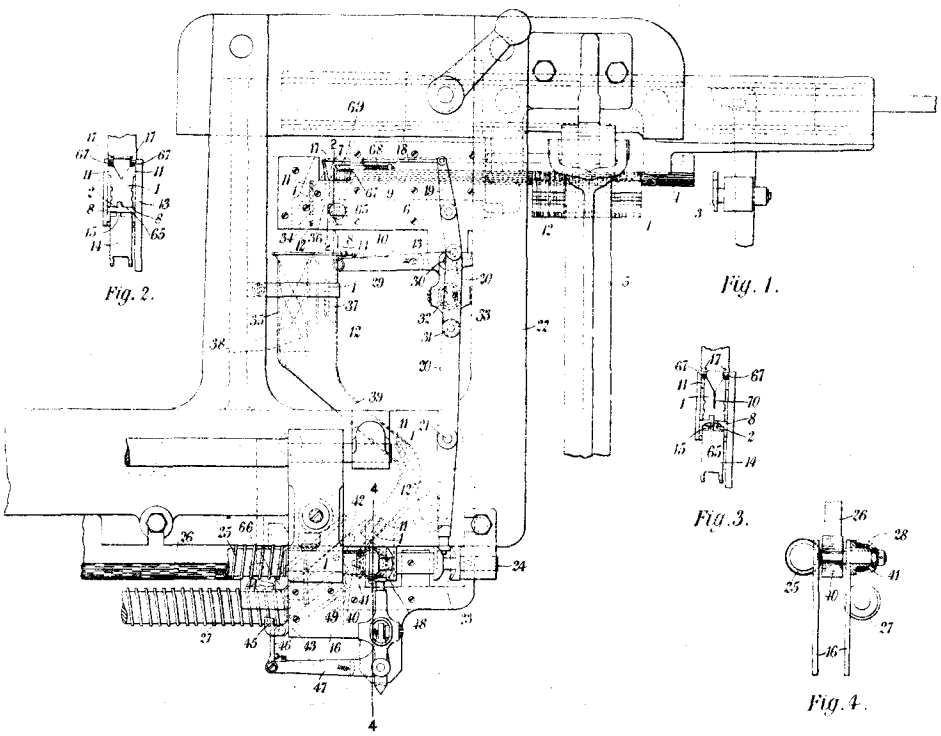

24014
Hunter. Typographical Composing-machine. (Linotype and Machinery, Ltd.—Holbourne and Longhurst.)

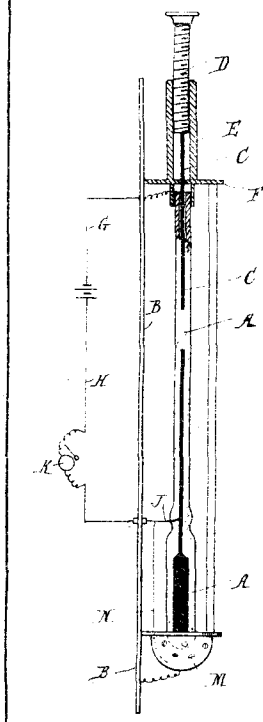

23967
Westneat. Temperature-indicator.

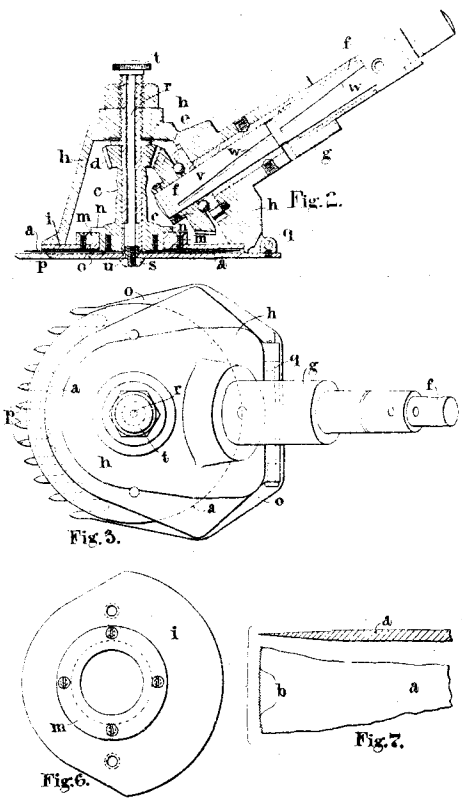

23885
Baldwin and Rayward. Sheep-shearing Machine. (Johnson and Calvert.)

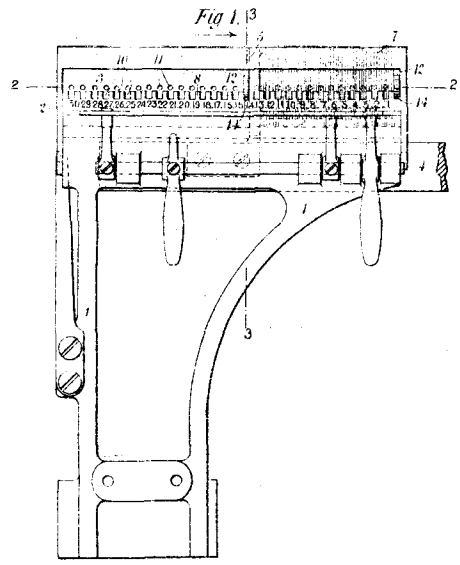

24015
Hunter. Linotype Machine. (Linotype and Machinery, Ltd.—Holbourne and Longhurst.)

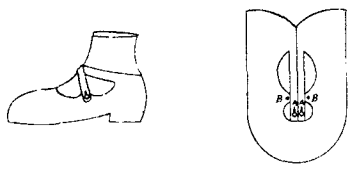

24035
Pallant. Shoe-upper.

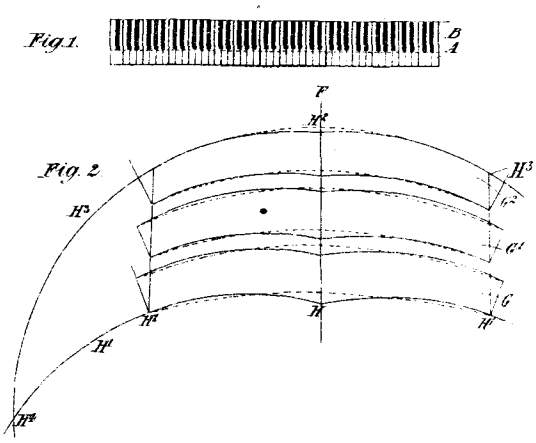

23995
Hughes. Pianoforte, &c. (Clutsam.)

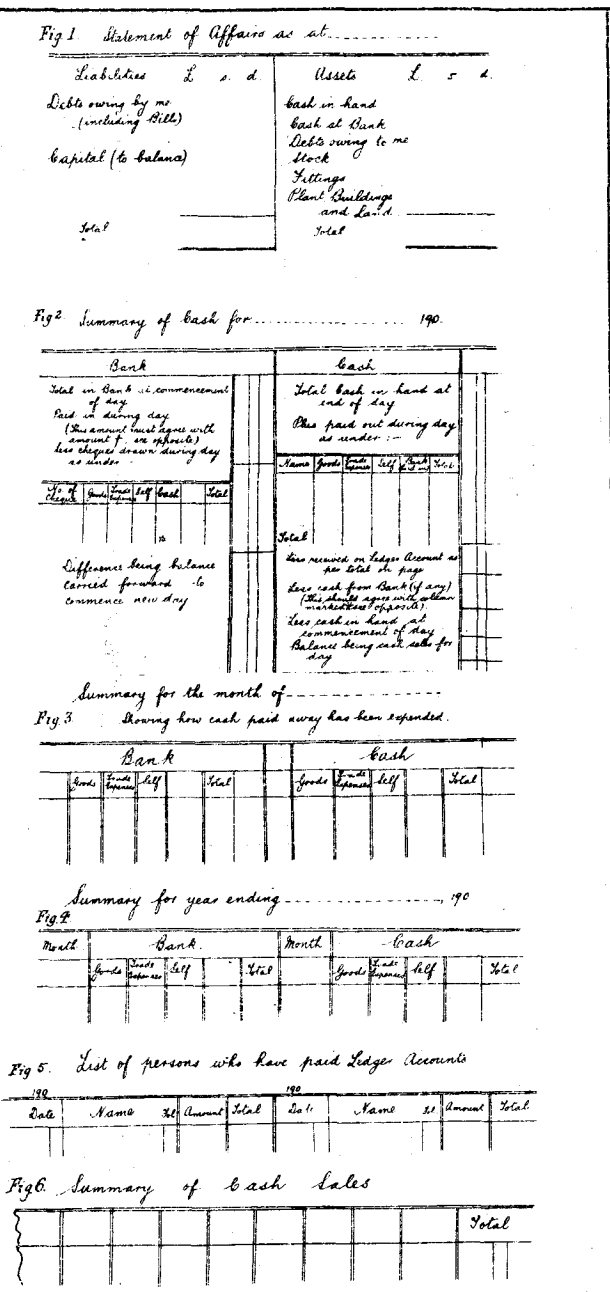

22792
Stewart. Cash-book.

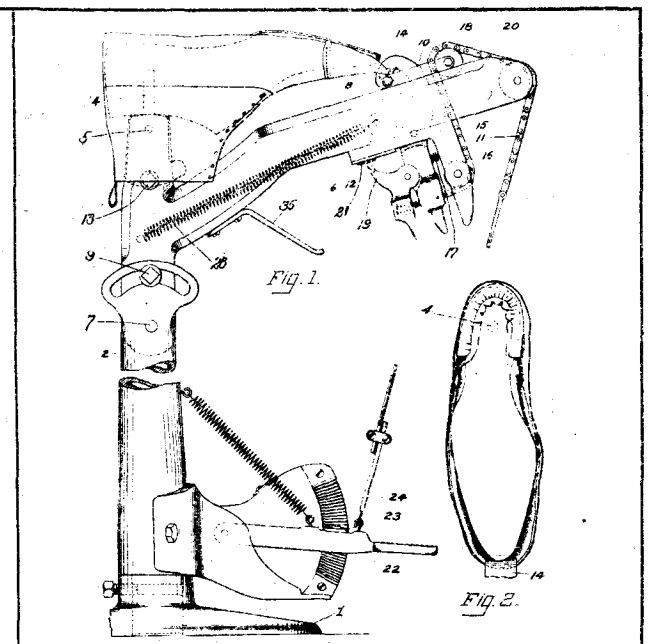

22920
United Shoe Machinery Co. Shoe-machine. (Bayard.)

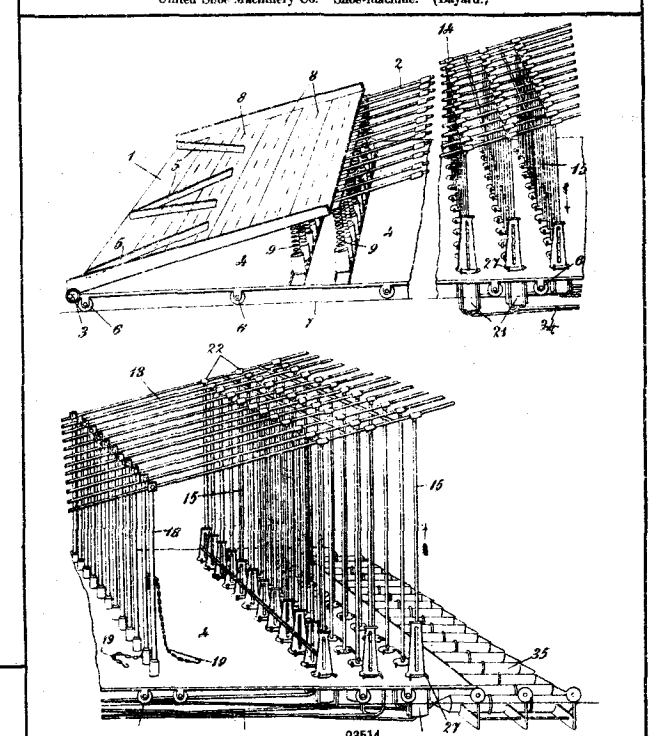

23514
Ravelli. Tide-motor.

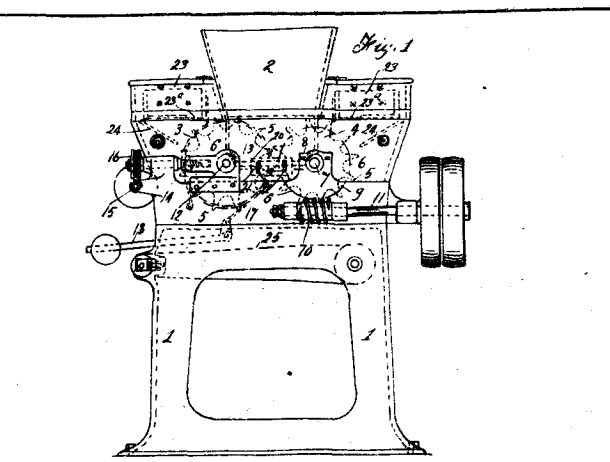

23824
Baker and Sons. Ltd. Dough-dividing Machine. (Burns.)

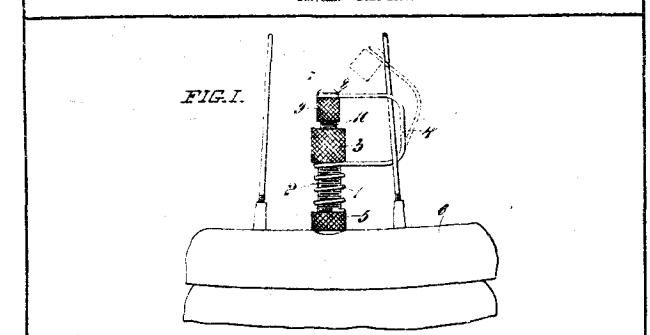

22633
Hutchinson. Valve-cap Holder.

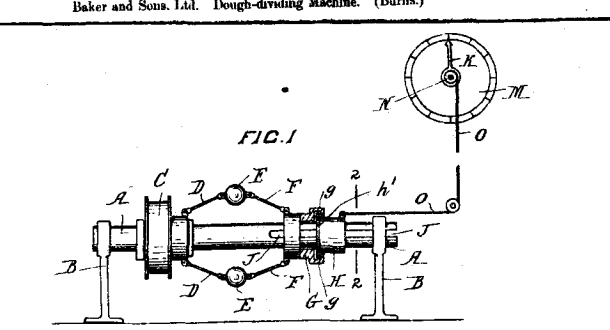

23990
Gilfedder. Speed-indicator.

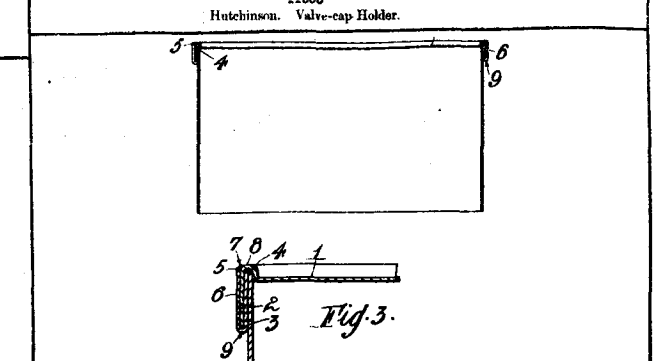

23999
Austral Canning Co. Proprietary Ltd. Canister-lid. (Webster.)